Please read the instructions carefully before use.

INSTRUCTION MANUAL

DC CAR REFRIGERATOR

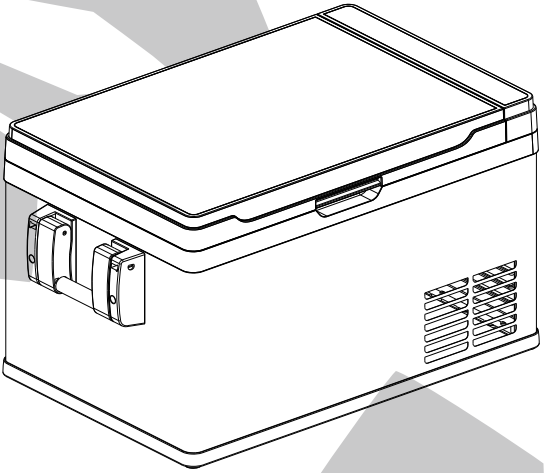

FAST REFRIGERATIONSPEED

ENERGY EFFICIENT

Structural Characteristics

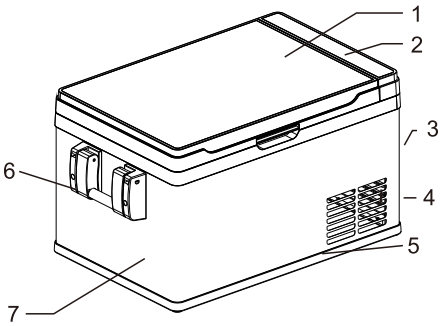

1.Door;
2.Touch screen;
3.Ventilation grill;
4.Power socket;
5.Bottom frame;
6.Handle;
7.Body;

Technical Parameter

Model	LP-25Q	LP-30Q	LP-40Q	LP-50Q
Voltage(V)	DC 12/24	DC 12/24	DC 12/24	DC 12/24
Current(A)	4.2/2.1	4.2/2.1	4.2/2.1	4.2/2.1
Volume(L)	25	30	40	50
Climate Type	SN/N/ST	SN/N/ST	SN/N/ST	SN/N/ST
Refrigerant	R134a/32g	R134a/36g	R134a/40g	R134a/42g
Foaming material	C_5H_{10}	C_5H_{10}	C_5H_{10}	C_5H_{10}
Product Size(mm)	644x386x351	650x386x389	650x386x464	650x386x539
Packing Size(mm)	660x460x430	660x460x460	660x460x535	660x460x610
N.W.(kg)	15.0	15.5	16.5	17.5

NOTE: The technical parameters in this table are tested in standard status. If any change, please take rating label as standard. There will be no any additional notice. We hereby apologize for this!

Use and operation

Transfer and storage

To avoid the failure of compressor or system, the inclined angle of refrigerator body can't be more than 45 during the transport.	The refrigerator shall be placed steadily in dry and ventilated location, avoid strong sunshine, heat source or any kinds of volatile and corrosive substance.	Before use, it's necessary to remove the packing foam completely keep ventilated gap more than 100mm around refrigerator body, in order to guarantee the components such as condenser in good and ventilated radiating status, otherwise it will influence refrigerating effect, even damage the heart of refrigerating system: compressor and Controller.

Power on and test run

When inserting and pulling out power plug, it's not allowed to drag power line.	It's forbidden to spray water on refrigerator body or power plug to protect impacting the insulated and anti-corrosive performance of electric appliance.	Avoid powering on and off frequently as possible, and if powering off, it only can power on again five minutes later.
If power line and plug are damaged, it shall be replaced by professional serviceman immediately. Users are not allowed to replace at will.	After completing above work, power on, and set the temperature you need. Then check if the indicator light shines normally and if the temperature in the refrigerator shall fall obviously, the refrigerator can be used.	

Adjustment of temperature controller

1. POWER

Press "POWER( )" for 3 seconds, the refrigerator can be turned on or off.

2. Temperature setting

You can adjust the temperature by the up and down. "UP "for UP, "DOWN "and for down.

3. Parameter setting

Press the "SET "for 3 seconds,enter the parameter setting interface, tap the "UP "or "DOWN "to adjust the corresponding parameters, touch the "SET " replacement parameter function options(See the function settings table for specific meaning).

4. Mode switching

Touch the"SET ", MAX and ECO mode switch quickly, the"MAX/ECO"red light indicates MAX, green light indicates ECO.

5. Reset

Press the "UP " more than 3 seconds after the machine was OFF, waiting to be highlighted on the full screen, all parameters are restored to factory setting.

*The above temperature operations are only for freezing temperatures.

Parameter setting

Parameter	Function	Set Range	Ex-Factory Value
F1	Minimum temperature control	-20°C~X*	-20°C
F2	Maximum temperature control	X*~40°C	+10°C
F3	Start temperature correction	1~10°C	+7°C
F4	Stop temperature correction	1~10°C	0°C
F5	Protect Delay	0~10mins	3min
F6	Temperature compensation (above-6℃)	-10°C~10°C	0°C
F7	Temperature compensation (-6~-12℃)	-10°C~10°C	-1°C
F8	Temperature compensation (below-12℃)	-10°C~10°C	-2°C
F9	Battery protection	P1 P2 P3	P2

"X*" is the temperature you want to set.

Battery Protection Level

Level	12V System/V		24V System/V	
	Stop	Work	Stop	Work
P3:H	11.1	12. 4	24. 3	25. 7
P2:M	10. 1	11.4	22. 3	23. 7
P1:L	9. 6	10. 9	21.3	22. 7

Fault Code

E0: When the temperature sensor is short-circuited, the compressor enter the timing mode, and the compressor runs for 30 minutes and stops for 30 minutes.

E1: Module input undervoltage protection.

E2: DC fan overcurrent protection

E3: Compressor start abnormal protection

E4: Compressor speed abnormal protection

E5: Compressor or controller temperature abnormal protection

E9: When the temperature sensor is open-circuited, the compressor enter the timing mode, and the compressor runs for 30 minutes and stops for 30 minutes.

Usage Mode

○This product is a dual-purpose refrigeratory / freezer for automobiles and households.
A. When used on a vehicle, the external power supply is DC 12/24V, which can be directly connected to the vehicle through the cigarette lighter.
B. Connect the 220V power socket directly through the adapter at home.

○When this product is connected to the automobile power supply for a long time, it should keep the automobile engine in operation. Avoid the excessive power consumption of automobile battery, which makes the automobile unable to start.

○The trunk of a three-compartment car will affect the refrigeration effect because of its closed environment, long running time and high space temperature. If conditions permit, try to open the reserve box to run. When placing the product, there should be ventilation and heat dissipation space around the product, and the articles on board should not be close to the product.

○If more food needs to keep low temperature, you can connect 220V power supply in advance to freeze the food. When traveling, put the product and food into the car.

○When your car does not have a dedicated power interface, please choose 4S shop or a qualified vehicle maintenance organization to install the power interface.

○The adapter used in this product is a special power supply and can not be used in other occasions.

NOTE When using the refrigerator for the first time, wait for it to reach the preset temperature before putting in food

Normal Phenomenon

○When refrigerators are used for the first time or start-up, because the operation of the refrigerator is not stable, the refrigerator will emit a "buzz" sound when it starts to run. When the operation is stable, the sound will be reduced.

○When used for the first time, there will be long working hours and high compressor temperature, which is the normal situation.

○The sound of liquid flowing in the refrigerator is the sound of refrigerant circulating in the pipeline, which belongs to the normal phenomenon.

○The rated power consumption indicated in the technical data is the value measured during 24 hours of stable operation under the marked working conditions. When more food is put in, the ambient temperature is higher or the door is opened frequently, it is normal that the actual power consumption is higher than the standard value.

○High ambient temperature in summer and long working time of compressor are normal phenomena.

○The temperature difference between the refrigerator and the environment is large. When the air humidity is high, it is normal for the frame to appear dew and frost. Dry it with a soft cloth.

○Refrigerants used in refrigeration of refrigerators are injected into the evaporator in a liquid state, so a similar "hiccup" sound occurs.

○There are compressors and condensers on the right side of the refrigerator, which will dissipate heat when working, which is a normal phenomenon.

○When defrosting, cut off the power supply. After heat preservation treatment, take out the articles and put them in the shade. A flat-bottomed container with hot water below 50 C is placed in the refrigerator to accelerate defrosting.

○After thawing the frost, dry the refrigerator with a dry cloth, then turn on the power supply, and put the food into it after 2 hours of power on. After 12 hours, the temperature will be adjusted to normal temperature.
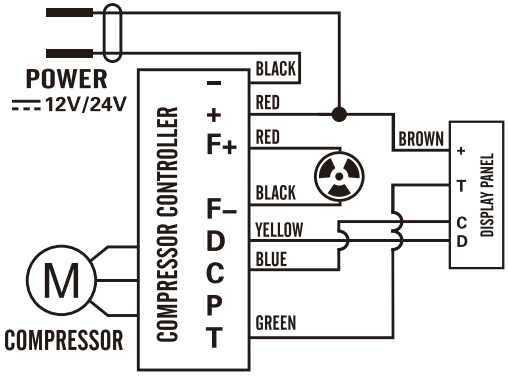
Circuit Diagram